Established 1958

E.H. CAMBRIDGE & Co.

"THE GAS PEOPLE"

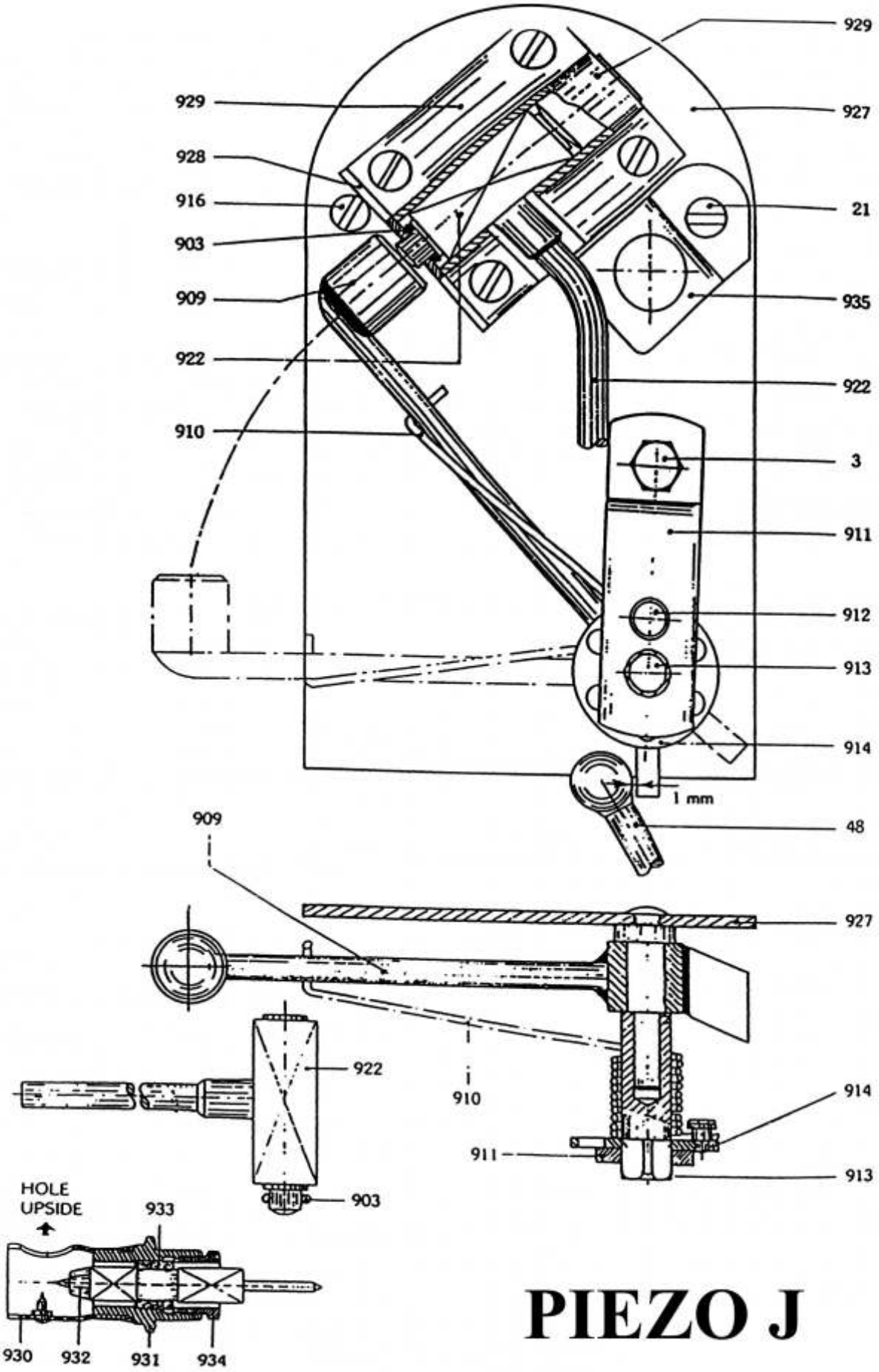

PIEZO J